PRODUCT LEAFLET

Stack frame clamp

112.1019 Stackframe - Clamp for stack frame a 40x40 frame

With two of these clamps and two trigger clamps (optionally available) one can mount a projector in a stack or rigging frame to a truss.

► This product is **TÜV certified and meets EC and DGUV requirements**
max. load without safety cable 50 kg
max. load with safety cable 100 kg
Download the TÜV certificate for 112.1019

SmartMetals Mounting Solutions B.V. • Vlietskade 8016 • 4241 WS ARKEL • The Netherlands
T +31 (0)88 70 60 100 • **E** info@smartmetals.nl • **W** www.smartmetals.nl

PRODUCT LEAFLET

Stack frame clamp

Features

Weight: 1.60 kg
Colour: Black

Maximum load: 100 kg
Other information: 2 pieces required per stack frame

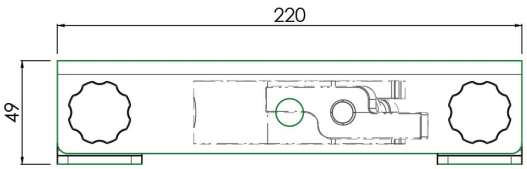

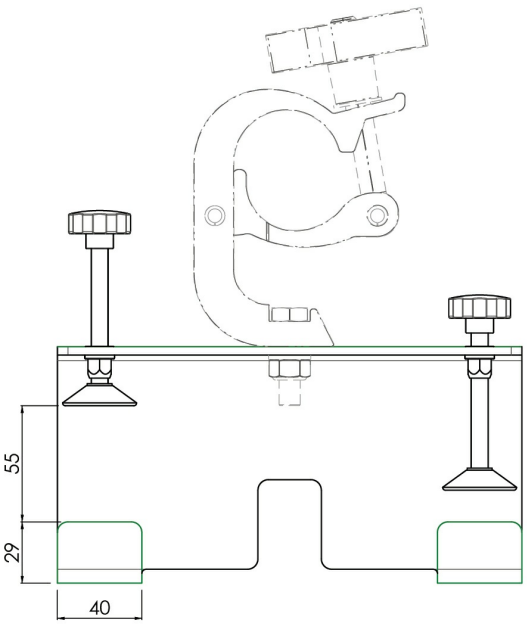

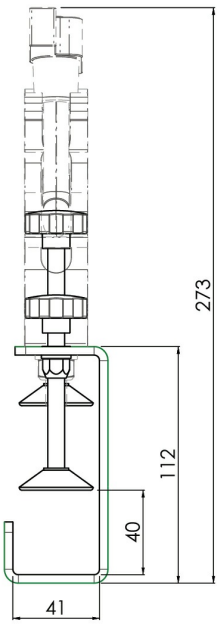

SmartMetals Mounting Solutions B.V. • Vlietskade 8016 • 4241 WS ARKEL • The Netherlands
T +31 (0)88 70 60 100 • **E** info@smartmetals.nl • **W** www.smartmetals.nl