PRODUCT LEAFLET

Ceiling mount 3 metre

072.8300-122 Ceiling mount 3 metre (light series) incl. bracket VESA 200

The light series ceiling mounts are specifically developed for mounting light displays up to 30 kg to the ceiling. Each ceiling mount consists of a ceiling plate with an aluminium column of 1, 2 and 3 metre attached; which can easily be shortened in length. A white ceiling ring will cover the hole made in the suspended ceiling. A screen mount with most common VESA pattern is supplied and has a tilt function of 15 °. Cables can be nicely concealed in the cable duct.

SmartMetals Mounting Solutions B.V. • Vlietskade 8016 • 4241 WS ARKEL • The Netherlands
T +31 (0)88 70 60 100 • **E** info@smartmetals.nl • **W** www.smartmetals.nl

PRODUCT LEAFLET

Ceiling mount 3 metre

Features

Maximum length: 3000 mm
Weight: 18.60 kg
Colour: Dark grey, Aluminium
Maximum load: 30 kg
Screen position: Landscape, Portrait
Inch range: Max. 55 inch

Bracket/interface: Included
Type bracket/interface: VESA
Range bracket/interface: VESA 100, 200
Tilt function: Max. 15°
Cable duct: 35 x 15 mm

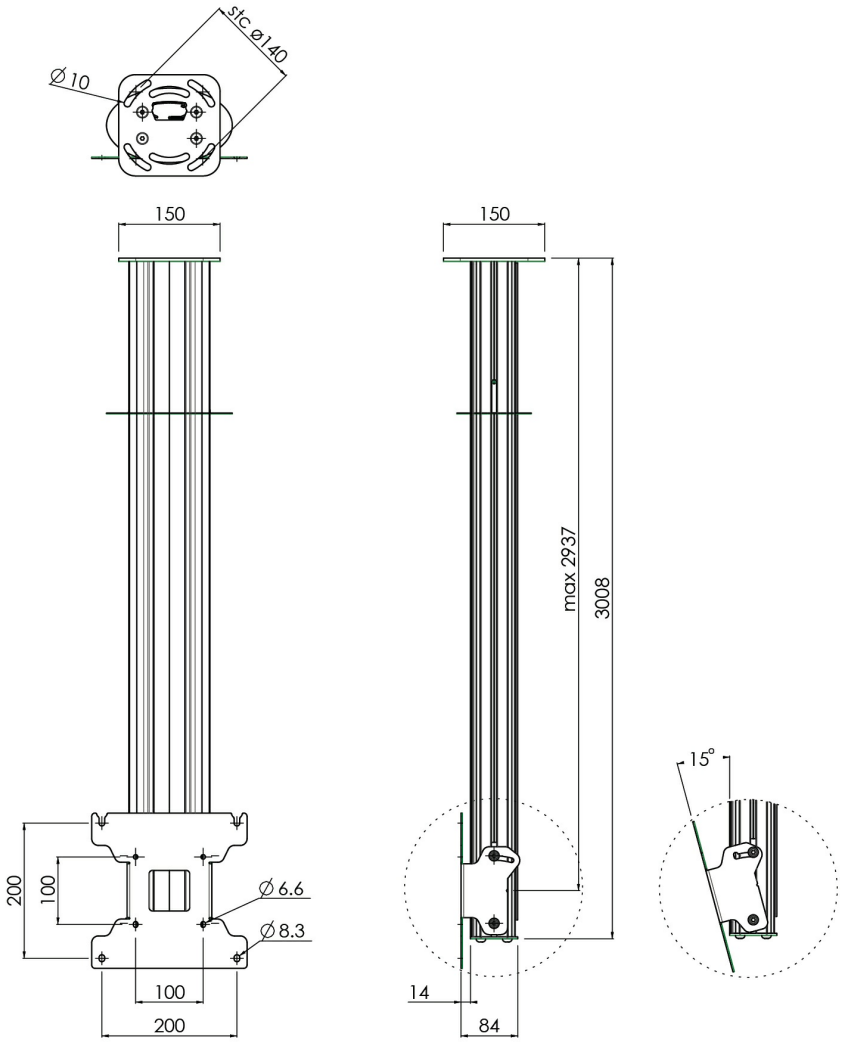

SmartMetals Mounting Solutions B.V. • Vlietskade 8016 • 4241 WS ARKEL • The Netherlands
T +31 (0)88 70 60 100 • **E** info@smartmetals.nl • **W** www.smartmetals.nl