Panasonic

Operating Instructions

Fisheye Lens Commercial Use

Model No. ET-D3LEF70

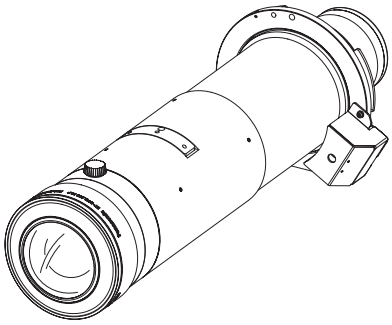

ENGLISH

Thank you for purchasing this Panasonic product.

- To ensure correct use of this lens, please read the operating instructions supplied with the lens and the projector carefully.
- **Before using this product, be sure to read "Read this first!" (➡ Page 3)**.
- Please save this manual for future use.

DPQX1223ZA

Contents

Read this first! 3

Before Use 4

Attaching the Lens / Detaching the Lens 5

Before replacing the projection lens 5

Attaching the Lens 6

Lens calibration 7

Focus adjustment function 10

Detaching the Lens 11

Projection relationships 12

Lens shift ranges 14

Specifications 15

Dimensions 16

Read this first!

Always follow these precautions

WARNING:

Do not look at or place your skin into the light emitted from the lens while the projector is being used.

Doing so can cause burns or loss of sight.

- Strong light is emitted from the projector's lens. Do not look at or place your hands directly into this light.
- In addition, turn off the power and switch off the main power when you are away from the projector.

Do not project an image with the lens cover attached.

- Doing so can cause fire.

CAUTION:

Before replacing the projection lens, be sure to turn off the power and disconnect the power plug from the wall outlet.

- Unexpected projection of light may cause injury to eyes.
- Replacing the projection lens without removing the power plug may result in electric shock.

Do not stand in front of the lens while the projector is being used.

Doing so can cause damage and burns to clothing.

- Strong light is emitted from the projector's lens.

Do not place objects in front of the lens while the projector is being used.
Do not place objects in front of the lens to block the light.

Doing so can cause fire, damage to an object, or malfunction of the projector.

- Strong light is emitted from the projector's lens.

Do not open the desiccant bag. Do not eat the contents.

Inadvertently ingesting desiccant could be harmful.

- If the desiccant gets into your eyes or mouth, immediately rinse with plenty of water and seek medical attention.
- Keep desiccant out of the reach of children.

Before Use

■ Supported projectors

PT-RQ32K / PT-RZ31K / PT-RS30K / PT-RZ21K / PT-RS20K / PT-RQ13K / PT-RZ12K / PT-RS11K / PT-DZ21K2 / PT-DS20K2 / PT-DW17K2 / PT-DZ16K2 / PT-DZ13K / PT-DS12K / PT-DW11K / PT-DZ10K

Note

- Models other than the above may also be supported. Refer to the operating instructions for your projector or the Panasonic website (https://panasonic.net/cns/projector/).
- If the projector you are using is PT-RQ32K / PT-RZ31K / PT-RS30K / PT-RZ21K / PT-RS20K, you may not be able to use the projection lens depending on main version of the firmware. If main version of the firmware is the version number shown below, update to the latest firmware before use.
  - PT-RQ32K / PT-RZ31K / PT-RS30K: Earlier than 3.00
  - PT-RZ21K / PT-RS20K: Earlier than 2.00

  For details on the update procedure, refer to the latest firmware information on the Panasonic website (https://panasonic.net/cns/projector/pass/).
- The main version of the firmware can be checked in the [STATUS] screen.

■ Supplied accessories

Make sure that the following has been provided. Numbers enclosed in < > show the number of accessories.

Lens cover <2>
(The product is delivered with the lens covers attached.)

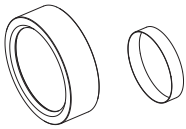

Attaching the Lens / Detaching the Lens

Before replacing the projection lens

Return the projection lens to the home position before detaching or attaching it. Attaching or detaching of the projection lens may not be possible if the lens is not in the home position. For details on how to return the lens to the home position, refer to the operating instructions of the projector.

Attention

- Turn off the projector before replacing the fisheye lens.
- Store the removed protection lens safely without subjecting it to vibration or impact.
- Remove the lens covers before attaching the fisheye lens.

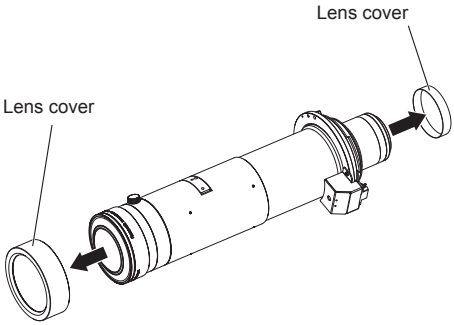

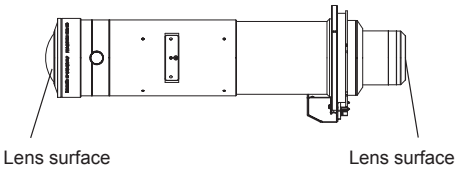

- Do not tough the lens surface with your bare hands. Any fingerprints or smudges on these surfaces will be magnified and lower the quality of the image displayed on the screen.
- The lens is made of glass. The lens could be damaged if brought into contact with or rubbed against hard objects. Handle the lens carefully.
- Wipe off any dust or particles on the lens with a cloth that is soft, dry, and clean.
  Do not wipe with fluffy cloths, cloths that contain oil or water, or dusty cloths.
- When using the fisheye lens, we recommend using it with the ET-PLF10 lens fixing attachment.
- When using the ET-PLF10 lens fixing attachment, the mounting bracket may not attach properly if the lens is not moved to the home position before attaching.

Attaching the Lens / Detaching the Lens (continued)

Attaching the Lens

The illustration for this procedure uses PT-RZ21K as an example.

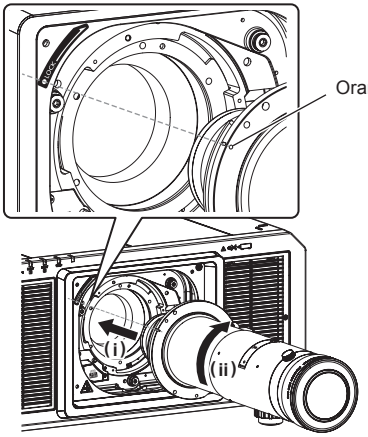

1) Insert the fisheye lens while aligning its marker (orange) with the marker on the projector (○ to the left of "LOCK"), and turn it clockwise until it clicks into place.

Lens drop prevention screw

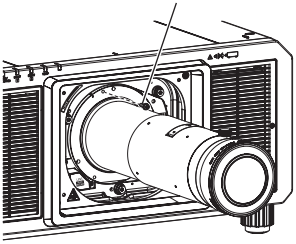

2) Use the lens drop prevention screw supplied with the projector to secure the fisheye lens.

- Use a Phillips screwdriver to secure the screw in the hole to the right of the marker (orange) on the fisheye lens (see left illustration).

Attention

- Gently turn the fisheye lens counterclockwise, and verify that it is secure.

Attention

- For projectors that have a projection lens cover, remove it first. For details, see "Attaching/removing the projection lens (optional)" in the operating instructions for the projector you are using.
- After attaching the projection lens, turn on the projector and perform lens calibration. (➡ Page 7)

Attaching the Lens / Detaching the Lens (continued)

Lens calibration

Perform lens calibration after attaching the lens.
The lens calibration procedure differs depending on the projector you are using and the main version of the firmware.

- **PT-RQ32K / PT-RZ31K / PT-RS30K: Main version is 3.00 or later**
  Refer to “Case 1” (➡ Page 7).
- **PT-RZ21K / PT-RS20K: Main version is 2.00 or later**
  Refer to “Case 1” (➡ Page 7).
- **PT-RQ13K / PT-RZ12K / PT-RS11K / PT-DZ21K2 / PT-DS20K2 / PT-DW17K2 / PT-DZ16K2 / PT-DZ13K / PT-DS12K / PT-DW11K / PT-DZ10K**
  Refer to “Case 2” (➡ Page 9).

■ Case 1

- PT-RQ32K / PT-RZ31K / PT-RS30K (main version of the firmware is 3.00 or later)
- PT-RZ21K / PT-RS20K (main version of the firmware is 2.00 or later)

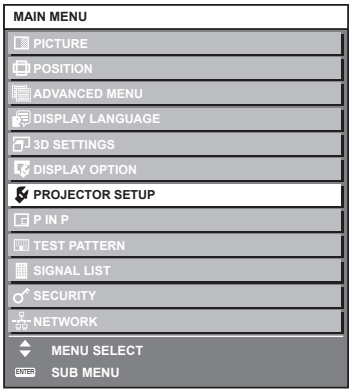

1) Press the <MENU> button.

- The [MAIN MENU] screen appears.

2) Use the ▲ and ▼ buttons to select [PROJECTOR SETUP].

3) Press the <ENTER> button.

- The [PROJECTOR SETUP] screen appears.

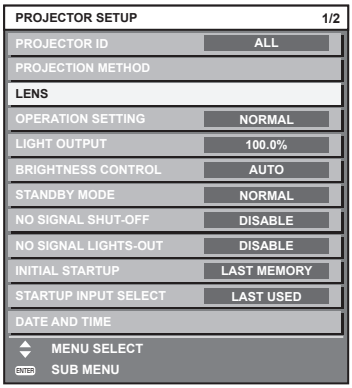

4) Use the ▲ and ▼ buttons to select [LENS].

5) Press the <ENTER> button.

- The [LENS] screen appears.

Attaching the Lens / Detaching the Lens (continued)

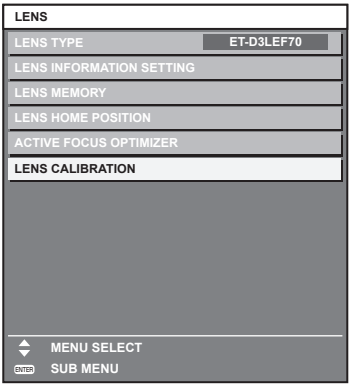

6) Use the ▲ and ▼ buttons to select [LENS CALIBRATION].

7) Press the <ENTER> button.

- The confirmation screen appears.

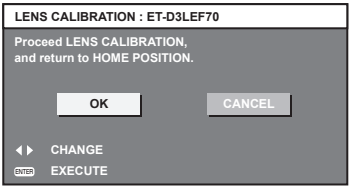

8) Use the ◄ and ► buttons to select [OK], and press the <ENTER> button.

- Lens calibration starts.
- The projection lens moves to the home position after adjustment range calibration is complete.

Note

- The lens position set here may not match the intended standard position exactly.
- Even after moving the lens to the home position with this procedure, you can adjust the position of the projected image within the lens shift ranges shown in the “Lens shift ranges” (➡ Page 14).

Case 2

- PT-RQ13K / PT-RZ12K / PT-RS11K
- PT-DZ21K2 / PT-DS20K2 / PT-DW17K2 / PT-DZ16K2
- PT-DZ13K / PT-DS12K / PT-DW11K / PT-DZ10K

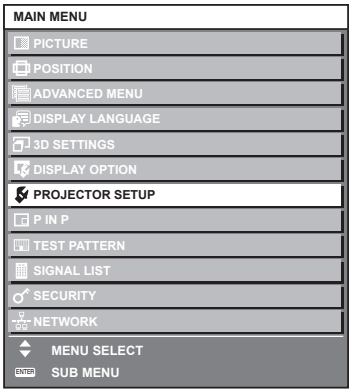

1) Press the <MENU> button.

- The [MAIN MENU] screen appears.

2) Use the ▲ and ▼ buttons to select [PROJECTOR SETUP].

3) Press the <ENTER> button.

- The [PROJECTOR SETUP] screen appears.
- When using the PT-RQ32K / PT-RZ31K / PT-RS30K: After configuring [FRONT/REAR] for [PROJECTION METHOD], set [PROJECTION METHOD] to [CEILING] for floor installations or [FLOOR] for ceiling installations.
  When using projectors other than the PT-RQ32K / PT-RZ31K / PT-RS30K / PT-RZ21K / PT-RS20K: Set [PROJECTION METHOD] to [FRONT/CEILING] or [REAR/CEILING] for floor installations or [FRONT/FLOOR] or [REAR/FLOOR] for ceiling installations.

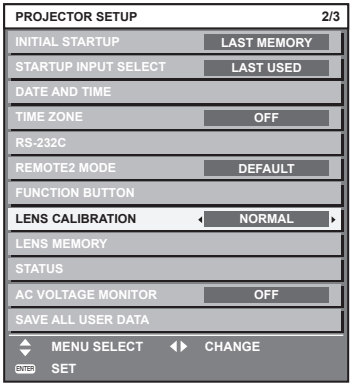

4) Use the ▲ and ▼ buttons to select [LENS CALIBRATION].

5) Use the ◄ and ► buttons to select [NORMAL].

6) Press the <ENTER> button.

- The confirmation screen appears.

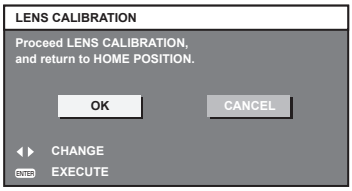

7) Use the ◄ and ► buttons to select [OK], and press the <ENTER> button.

- Lens calibration starts.
- The projection lens moves to the home position after adjustment range calibration is complete.

Note

- The lens position set here may not match the intended standard position exactly.
- Even after moving the lens to the home position with this procedure, you can adjust the position of the projected image within the lens shift ranges shown in the “Lens shift ranges” (➡ Page 14).

Attaching the Lens / Detaching the Lens (continued)

Focus adjustment function

The focal balance between the center and periphery of the projected image changes depending on the size of the projected image. The lens is equipped with a focus balance adjustment function for the screen periphery.

■ Adjusting the focus

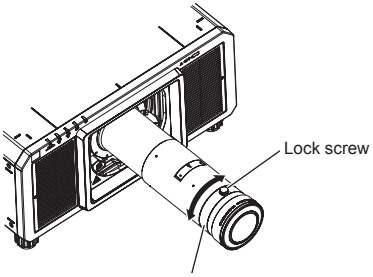

1) Operate the projector to align the focus of the center of the projected image.

2) Loosen the lock screw and turn the peripheral focus adjustment ring by hand as shown in the figure to the left to adjust the peripheral focus on the screen.

3) Check the focus at the center of the image again, and operate the projector to make fine adjustments.

4) Tighten the lock screw.

- The peripheral focus adjustment ring is locked.

Note

- The projection distances (THROW DISTANCE) displayed on the peripheral focus adjustment ring are approximate guides.

Attaching the Lens / Detaching the Lens (continued)

Detaching the Lens

The illustrations in this procedure depict use of the PT-RZ21K as an example.

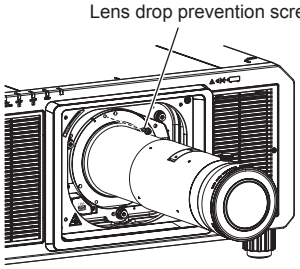

1) Remove the lens drop prevention screw.

- Use a Phillips screwdriver to remove the screw in first hole to the right of the marker (orange) on the fisheye lens.

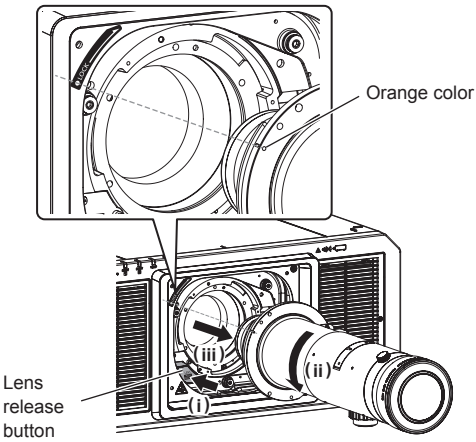

2) While pressing the lens release button, turn the fisheye lens counterclockwise, and remove it.

- Turn the fisheye lens counterclockwise until its marker (orange) aligns with the marker on the projector (○ to the left of "LOCK").

Attention

- Store the removed fisheye lens safely without subjecting it to vibration or impact.
- Store the removed lens drop prevention screw safely for future use.
- Attach the supplied lens cover before storing the lens.

Attention

- For projectors that have a projection lens cover, remove it first. In addition, there are cases where the attachment method or removal method of the projection lens cover differs from the procedure (illustration) described above depending on the model being used. For details, see "Attaching/removing the projection lens (optional)" in the operating instructions for the projector you are using.

Projection relationships

The dimensional relationship between the screen and the projector is shown below.

■ Dimensional relationship diagram

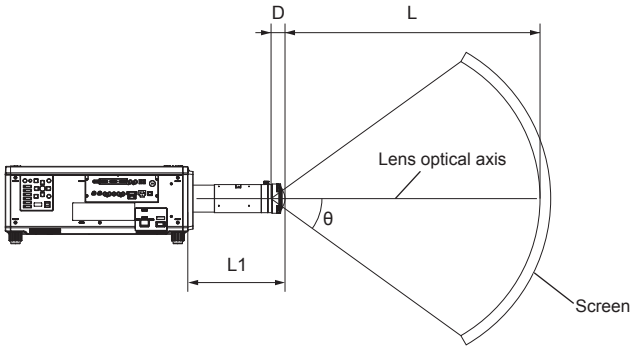

Note

- The indications of this illustration are premised on aligning the projected image size and position to the full screen.
- This illustration is not drawn to scale.

θ	Projected angle	L	Projection distance (lens front end to screen)
L1	Projector to lens front end	D	Exit pupil position

Model	L1 dimension (m)
PT-RQ32K / PT-RZ31K / PT-RS30K	0.355
PT-RZ21K / PT-RS20K / PT-RQ13K / PT-RZ12K / PT-RS11K / PT-DZ21K2 / PT-DS20K2 / PT-DW17K2 / PT-DZ16K2 / PT-DZ13K / PT-DS12K / PT-DW11K / PT-DZ10K	0.385

Supported projection distance (L) range (m)	2 to ∞

Projected angle (θ) (degrees)	Exit pupil position (D) (m)*
10	0.0233
20	0.0229
30	0.0223
40	0.0214
50	0.0202
60	0.0186
70	0.0165
80	0.0139
91.6 (maximum)	0.0096

* There may be slight discrepancies in the exit pupil positions.

Exit pupil position (D) formula	$D=-10^{-5}\times\theta^3 - 0.0003\times\theta^2 - 0.0173\times\theta+23.424$

Projection relationships (continued)

■ Projected angle of view diagram

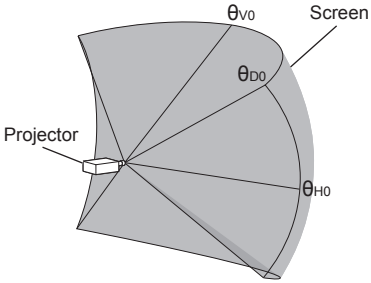

When the lens is centered

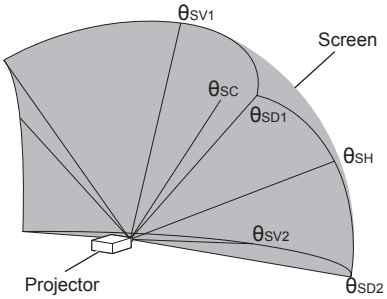

When the lens is shifted to the upward Vmax position

θ_{H0}	Maximum horizontal center angle of view
θ_{V0}	Maximum vertical center angle of view
θ_{D0}	Maximum diagonal angle of view

θ_{SC}	Center angle of view
θ_{SV1}	Maximum vertical center angle of view
θ_{SV2}	Maximum angle of view on opposing side of vertical center (θ_{SV1})
θ_{SH}	Maximum horizontal center angle of view
θ_{SD1}	Maximum diagonal angle of view
θ_{SD2}	Maximum angle of view on vertically opposing side of diagonal (θ_{SD1})

- **PT-RQ32K / PT-RQ13K**

θ_{H0}	θ_{V0}	θ_{D0}
61.3	38.4	72.3

θ_{SC}	θ_{SV1}	θ_{SV2}	θ_{SH}	θ_{SD1}	θ_{SD2}
28.4	66.6	10.0	67.5	90.8	62.1

- **PT-RZ31K / PT-RZ21K / PT-RZ12K / PT-DZ21K2 / PT-DZ13K / PT-DZ10K**

θ_{H0}	θ_{V0}	θ_{D0}
65.7	41.1	77.5

θ_{SC}	θ_{SV1}	θ_{SV2}	θ_{SH}	θ_{SD1}	θ_{SD2}
22.3	63.2	19.0	69.3	91.4	68.4

- **PT-RS30K / PT-RS20K / PT-RS11K / PT-DS20K2 / PT-DS12K**

θ_{H0}	θ_{V0}	θ_{D0}
60.7	45.5	75.9

θ_{SC}	θ_{SV1}	θ_{SV2}	θ_{SH}	θ_{SD1}	θ_{SD2}
22.8	68.3	22.8	64.8	91.5	64.8

- **PT-DZ16K2**

θ_{H0}	θ_{V0}	θ_{D0}
66.0	66.0	75.7

θ_{SC}	θ_{SV1}	θ_{SV2}	θ_{SH}	θ_{SD1}	θ_{SD2}
26.0	63.1	11.1	70.9	91.3	66.9

- **PT-DW17K2 / PT-DW11K**

θ_{H0}	θ_{V0}	θ_{D0}
66.0	37.1	75.7

θ_{SC}	θ_{SV1}	θ_{SV2}	θ_{SH}	θ_{SD1}	θ_{SD2}
26.0	63.1	11.1	70.9	91.3	66.9

Note

- The illustrations of projectors in this manual are for informational purposes only and do not represent a specific projector model. Configurations may vary with the model.
- As the front end of the lens approaches closer to a spherical or column-shaped screen center, uniformity of the total focus and total brightness of the projected image is enhanced.
- The angle of view values indicated in the tables are lens optical axis angles.

Lens shift ranges

Even after moving the lens to the home position according to “Lens calibration” on page 7, you can use the position of the projected image at that position as a basis, and use the lens shift adjustment function on the projector to adjust the position of the projected image within the respective lens shift ranges.
Perform lens shift adjustment within the ranges shown in the following illustrations.
Moving the lens outside of the adjustment ranges may alter the focus.

PT-RQ32K / PT-RQ13K	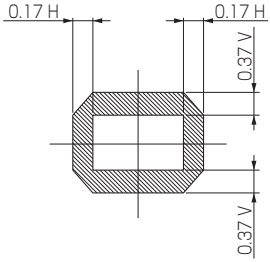
PT-RZ31K / PT-RZ21K / PT-RZ12K / PT-DZ21K2 / PT-DZ13K / PT-DZ10K	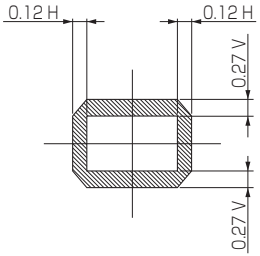
PT-DZ16K2	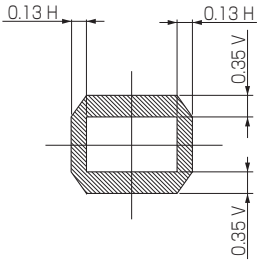

Lens shift ranges (continued)

PT-RS30K / PT-RS20K / PT-RS11K / PT-DS20K2 / PT-DS12K	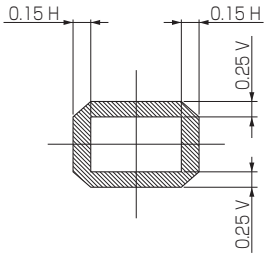
PT-DW17K2 / PT-DW11K	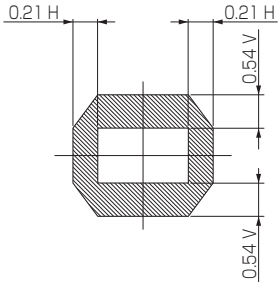

Note

- The home position of the projector a point of origin position for the lens shift (i.e., vertical and horizontal positions of the lens) based on the results of lens calibration. It is not the optical center position of the screen.
- The lens shift ranges that are shown indicate the positional relationships between the projector's display panel (DLP chip) and lens. The screen position of the image projected on the screen does not move in proportion to the screen size. For details on the relationship between the lens shift and the projected angle of view, see “Projection relationships” (➡ Page 12). DLP is a registered trademark of Texas Instruments.

- When using a projector other than the above

  Please see "Projecting" in the operating instructions for the projector you are using.

Specifications

F value	2.5
Focal length (f)	9.0 mm
Dimensions	Width 154 mm (6-1/16") (Excluding protrusions) Height 150 mm (5-29/32") Depth 529 mm (20-13/16")
Net weight	Approx. 7.1 kg (15.65 lb)

Dimensions

(Unit: mm)

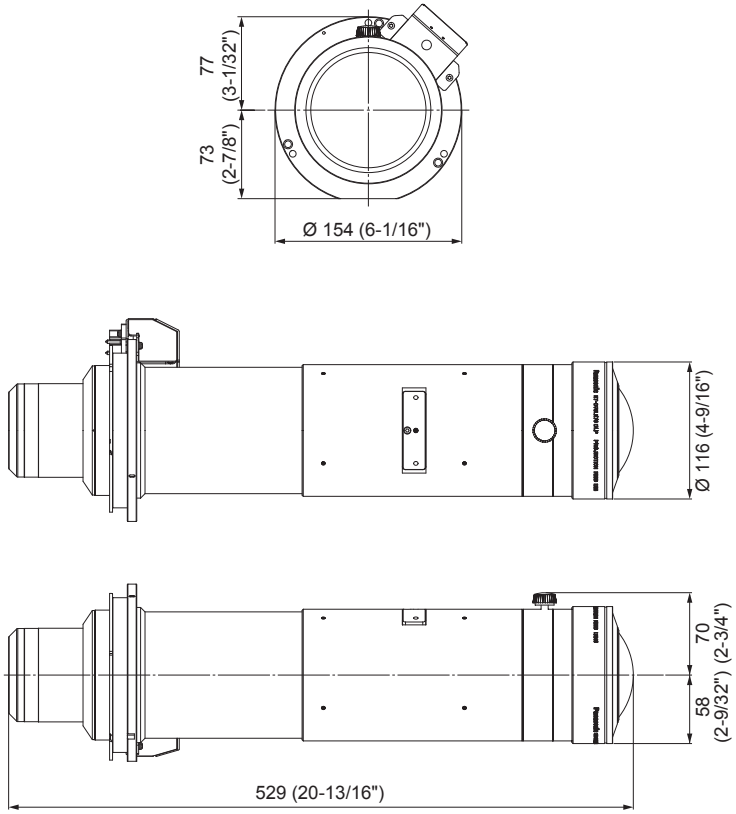

Information for users in the European Union

Importer's name and address within the European Union
Panasonic Marketing Europe GmbH
Panasonic Testing Centre
Winsbergring 15, 22525 Hamburg, Germany

Disposal of Old Equipment
Only for European Union and countries with recycling systems

This symbol on the products, packaging, and/or accompanying documents means that used electrical and electronic products must not be mixed with general household waste.
For proper treatment, recovery and recycling of old products, please take them to applicable collection points in accordance with your national legislation.
By disposing of them correctly, you will help to save valuable resources and prevent any potential negative effects on human health and the environment.
For more information about collection and recycling, please contact your local municipality.
Penalties may be applicable for incorrect disposal of this waste, in accordance with national legislation.

Information on Disposal in other Countries outside the European Union

This symbol is only valid in the European Union.
If you wish to discard this product, please contact your local authorities or dealer and ask for the correct method of disposal.

Product Information (for Turkey only)

AEEE Yönetmeliğine Uygundur.
Eski Ekipman ve Bataryaların İşlenmesi.
Sadece geri dönüşüm sistemleri olan Avrupa Birliği ve ülkeleri için geçerlidir.
Ürünler, ambalaj ve/veya ekli belgeler üzerindeki bu semboller kullanılmış elektrik ve elektronik ürünlerin genel ev atığı ile karıştırılmaması gerektiğini ifade eder.
Eski ürünlerin toplanması ve geri kazanılması için bu atıklar lütfen yasayla belirlenmiş olan uygun toplama merkezlerine teslim ediniz.
Bu atıkların doğru işlenmesiyle, değerli kaynakların korunmasına ve insan sağlığı ve çevreye olası negatif etkilerinin engellenmesine yardımcı olabilirsiniz.
Atıkların toplanması ve geri dönüşümü için detaylı bilgi için lütfen bağlı olduğunuz yerel yönetimlerle iletişime geçiniz.
Atıkların atılmasıyla ilgili yanlış uygulamalar yasayla belirlenmiş olan cezalara sebebiyet verebilir.

Declaration of Conformity
with the requirements of Technical Regulation on the Restriction Of the use of certain Hazardous Substances in Electrical and Electronic Equipment
(adopted by Order №1057 of Cabinet of Ministers of Ukraine)

The Product is in conformity with the requirements of Technical Regulation on the Restriction Of the use of certain Hazardous Substances in electrical and electronic equipment (TR on RoHS).

The content of hazardous substance with the exemption
of the applications listed in the Annex №2 of TR on RoHS:
1. Lead (Pb) – not over 0,1 % or 1000wt ppm;
2. Cadmium (Cd) – not over 0,01 % or 100wt ppm;
3. Mercury (Hg) – not over 0,1 % or 1000wt ppm;
4. Hexavalent chromium (Cr6+) – not over 0,1 % or 1000wt ppm;
5. Polybrominated biphenyls (PBBs) – not over 0,1 % or 1000wt ppm;
6. Polybrominated diphenyl ethers (PBDEs) – not over 0,1 % or 1000wt ppm.

Декларація про Відповідність
Вимогам Технічного Регламенту Обмеження Використання деяких Небезпечних Речовин в електричному та електронному обладнанні
(затвердженого Постановою №1057 Кабінету Міністрів України)

Виріб відповідає вимогам Технічного Регламенту Обмеження Використання деяких Небезпечних Речовин в електричному та електронному обладнанні (ТР ОВНР).

Вміст небезпечних речовин у випадках, не обумовлених в Додатку №2 ТР ОВНР, :
1. свинець(Pb) – не перевищує 0,1 % ваги речовини або в концентрації до 1000 частин на мільйон;
2. кадмій (Cd)– не перевищує 0,01 % ваги речовини або в концентрації до 100 частин на мільйон;
3. ртуть(Hg) – не перевищує 0,1 % ваги речовини або в концентрації до 1000 частин на мільйон;
4. шестивалентний хром (Cr6+) – не перевищує 0,1 % ваги речовини або в концентрації до 1000 частин на мільйон;
5. полібромбіфеноли (PBB) – не перевищує 0,1% ваги речовини або в концентрації до 1000 частин на мільйон;
6. полібромдефенілові ефіри (PBDE) – не перевищує 0,1 % ваги речовини або в концентрації до 1000 частин на мільйон.

Декларация о Соответствии
Требованиям Технического Регламента об Ограничении Использования некоторых Вредных Веществ в электрическом и электронном оборудовании
(утверждённого Постановлением №1057 Кабинета Министров Украины)

Изделие соответствует требованиям Технического Регламента об Ограничении Использования некоторых Вредных Веществ в электрическом и электронном оборудовании (ТР ОИВВ)..

Содержание вредных веществ в случаях, не предусмотренных Дополнением №2 ТР ОИВВ:
1. свинец (Pb) – не превышает 0,1 % веса вещества или в концентрации до 1000 миллионных частей;
2. кадмий (Cd) – не превышает 0,01 % веса вещества или в концентрации до 100 миллионных частей;
3. ртуть (Hg) – не превышает 0,1 % веса вещества или в концентрации до 1000 миллионных частей;
4. шестивалентный хром (Cr6+)– не превышает 0,1 % веса вещества или в концентрации до 1000 миллионных частей;
5. полибромбифенолы (PBB) – не превышает 0,1 % веса вещества или в концентрации до 1000 миллионных частей;
6. полибромдифеноловые эфиры (PBDE) – не превышает 0,1 % веса вещества или в концентрации до 1000 миллионных частей.

MEMO

Panasonic Corporation

Web Site : https://panasonic.net/cns/projector/
© Panasonic Corporation 2018

Panasonic System Communications Company of North America
5th Floor, Two Riverfront Plaza, Newark, NJ 07102-5490
TEL: (877) 803 - 8492

Panasonic Canada Inc.
5770 Ambler Drive, Mississauga, Ontario L4W 2T3
TEL: (905) 624 - 5010

SS0118AM0 -PS
Printed in Japan